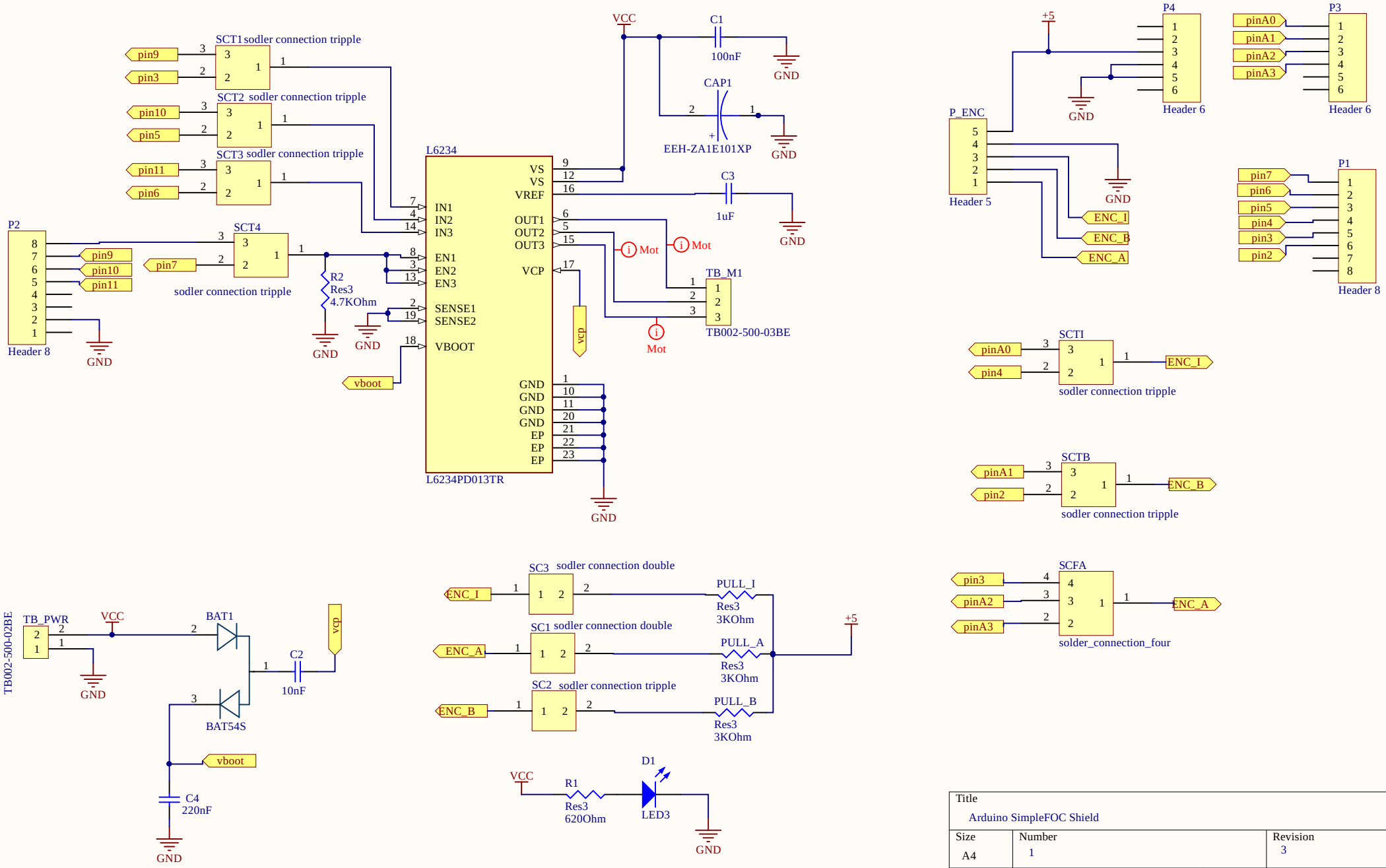

Title		
Arduino SimpleFOC Shield		
Size A4	Number 1	Revision 3
Date: 10/05/2020		Sheet of
File: C:\Users\..\ArduinoFOC.SchDoc		Drawn By: